ENVIROMIST
INDUSTRIES PTY. LTD.

# HN030 HYPRO FILTER 50 MESH

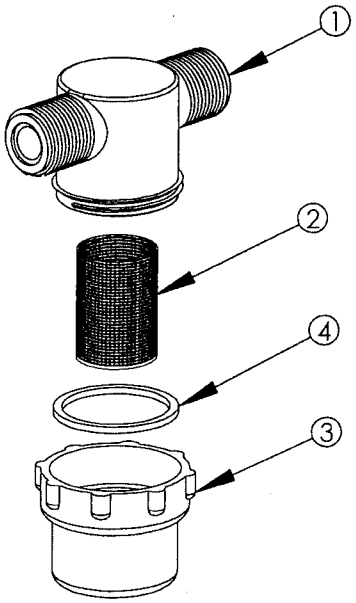


| ITEM NO. | PART NO. | DESCRIPTION |
|---|---|---|
| 1 | HN030D | Cap for Hypro Filter (Body) |
| 2 | HN030C | Screen for Hypro Filter |
| 3 | HN030A | Bowl for Hypro Filter |
| 4 | HN030B | Viton Gasket for Hypro Filter |

# NOTES